EBA 40414SiLENCIO BWT-Stahl (Stand14.01.2015)

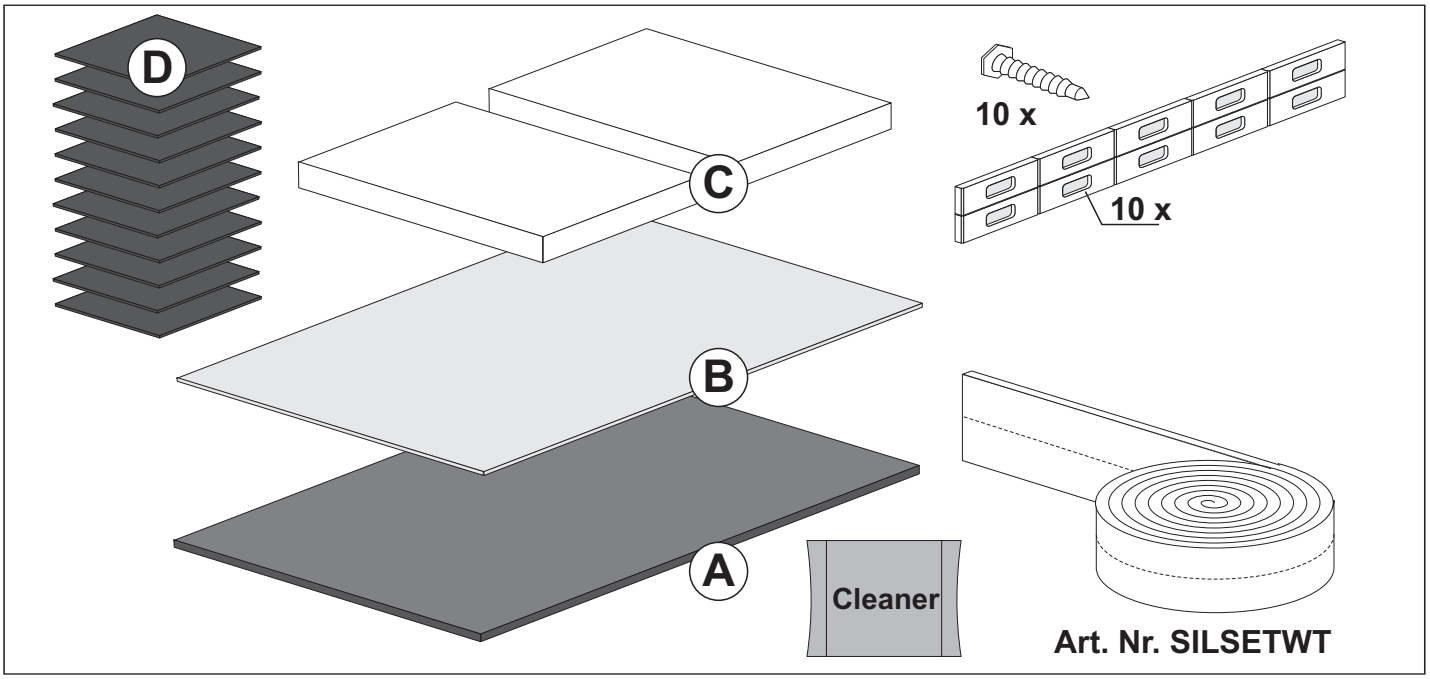

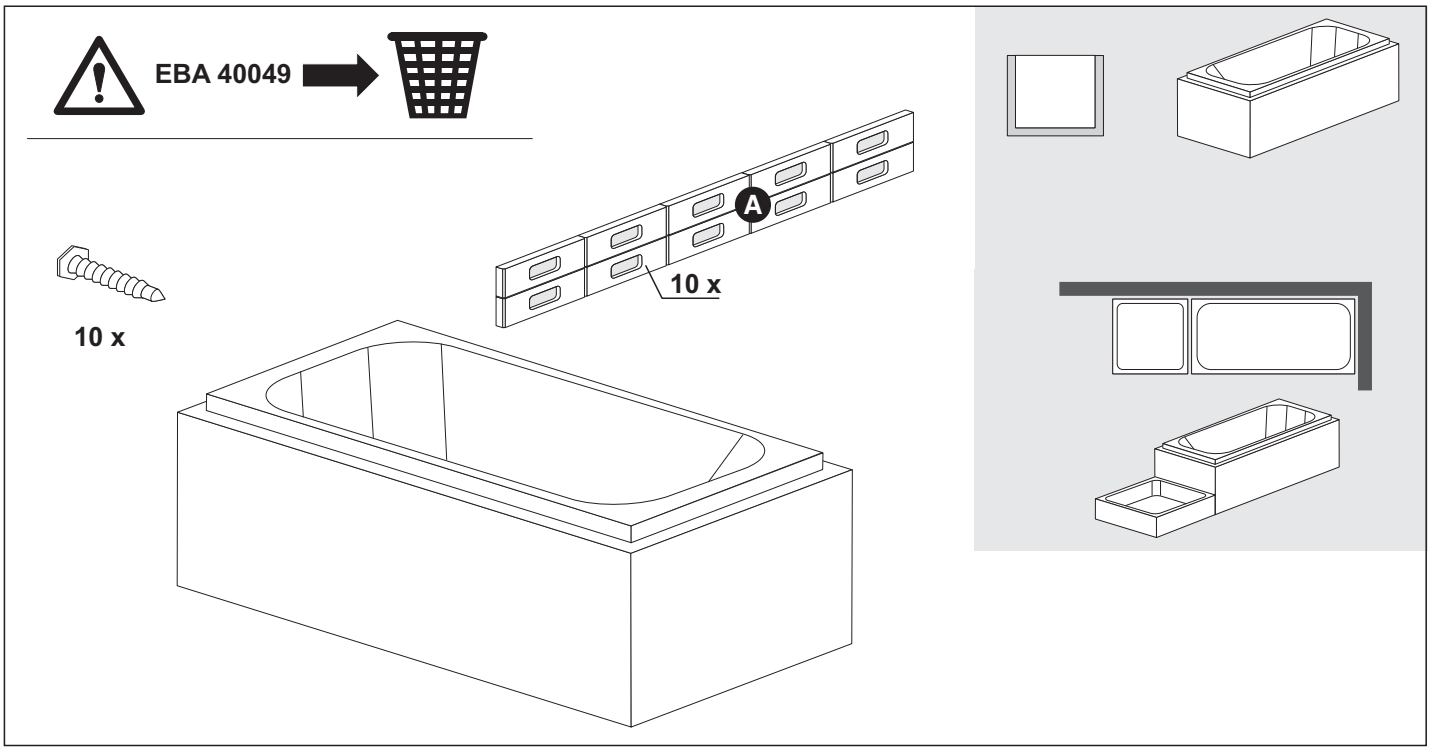

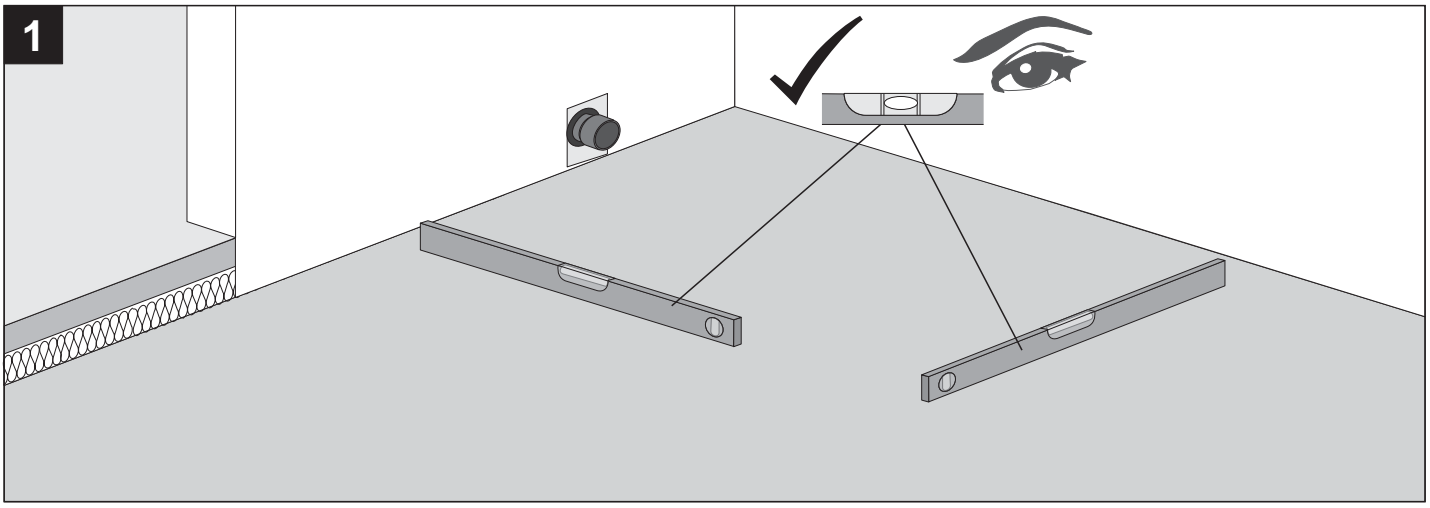

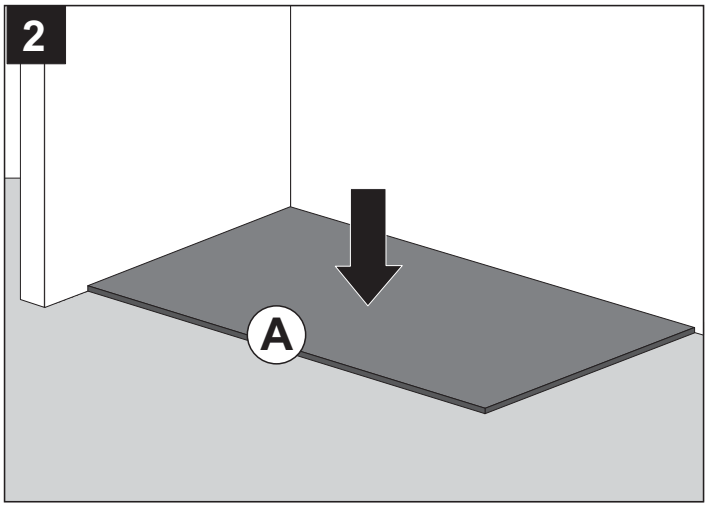
2
A

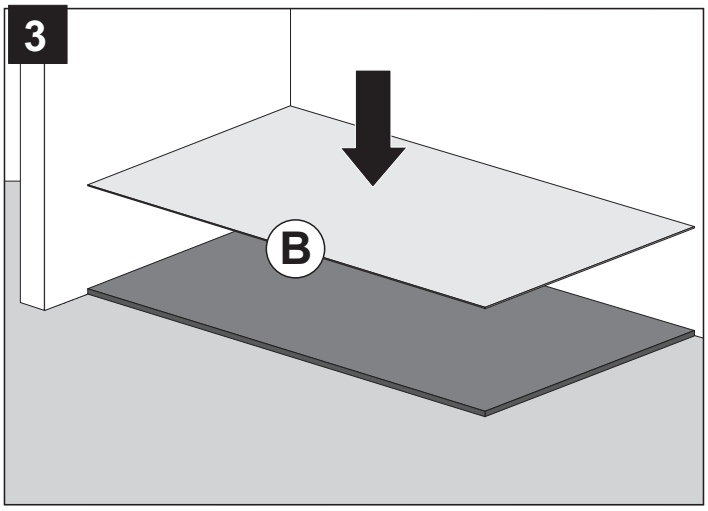
3
B

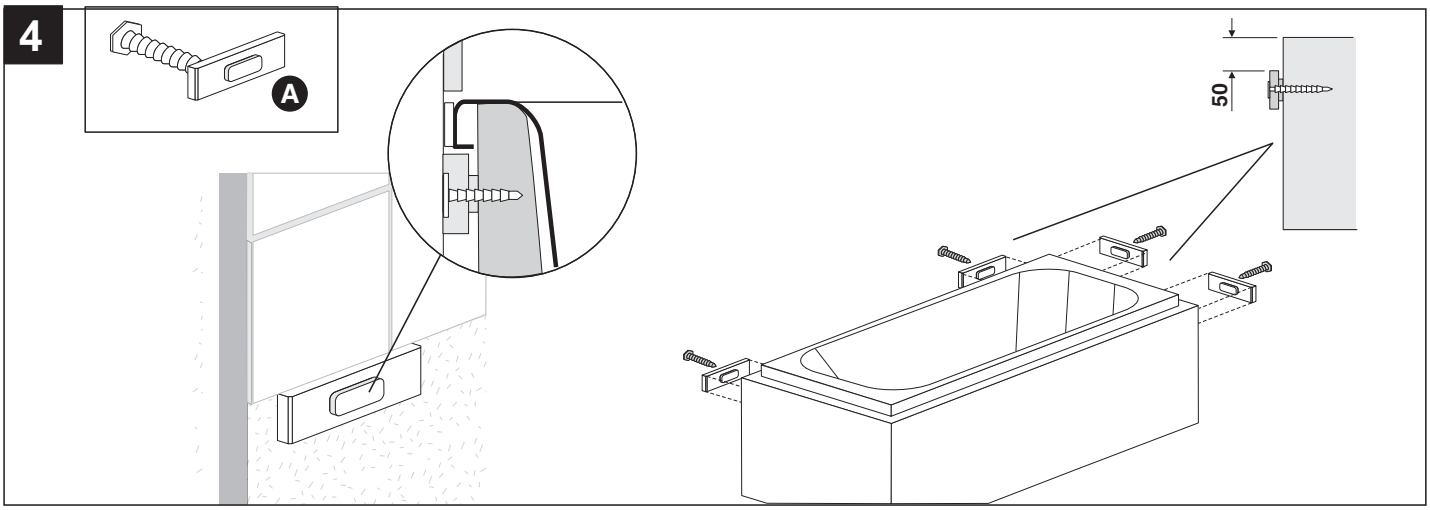
4
A
50

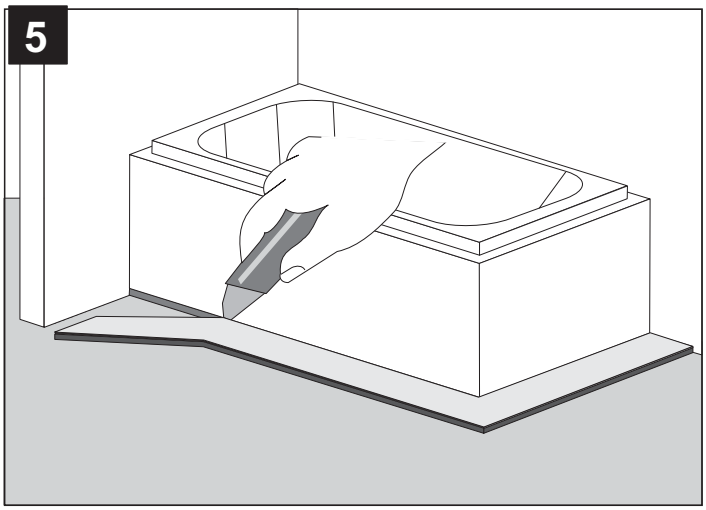
5

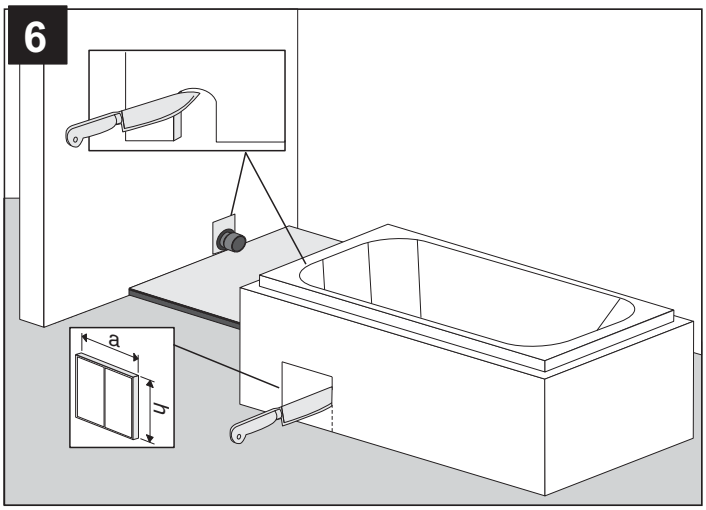
6
a
h

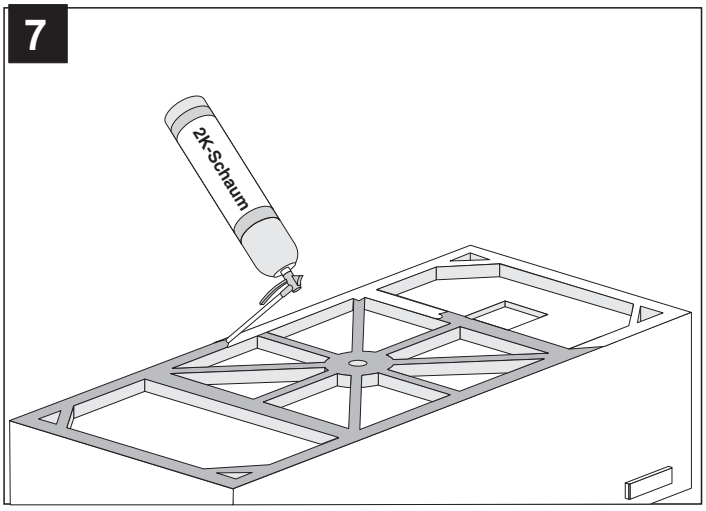
7
2K-Schaum

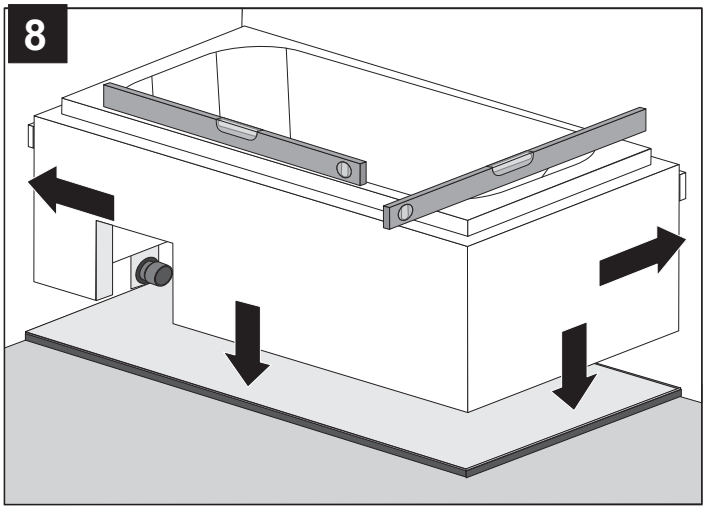
8

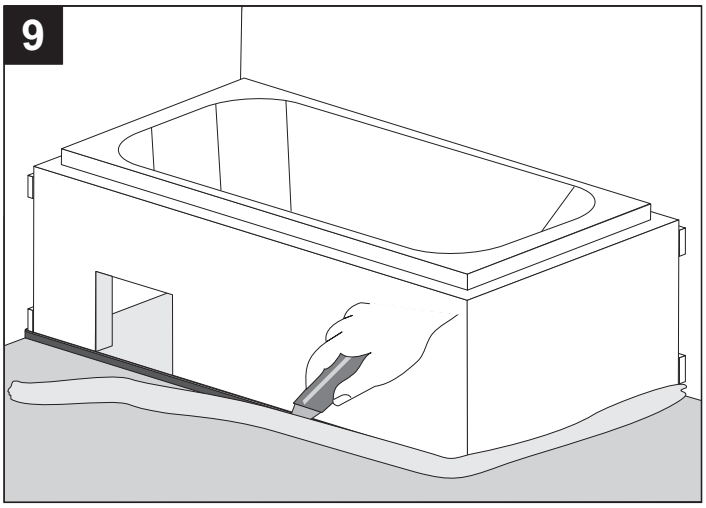
9

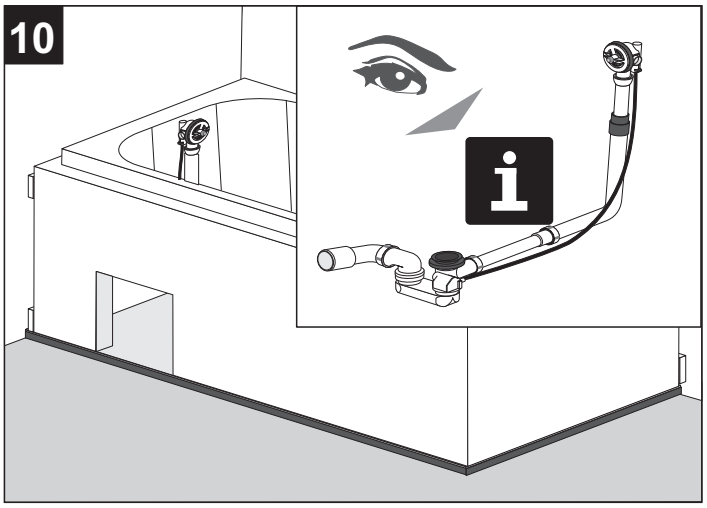
10

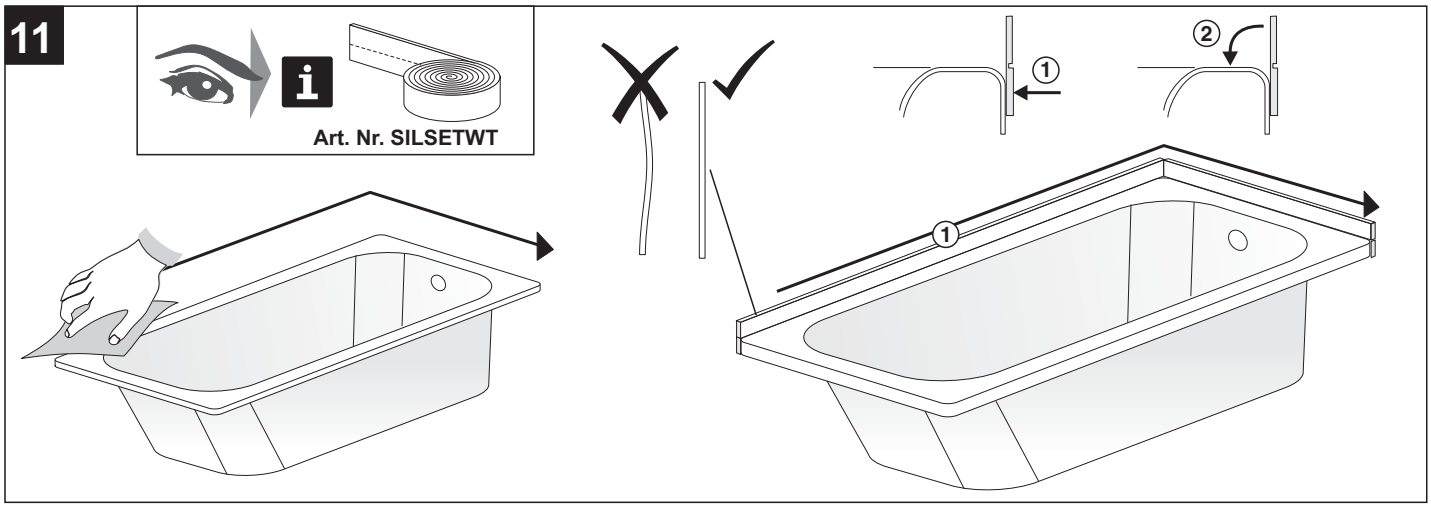
11
Art. Nr. SILSETWT
1
2
1

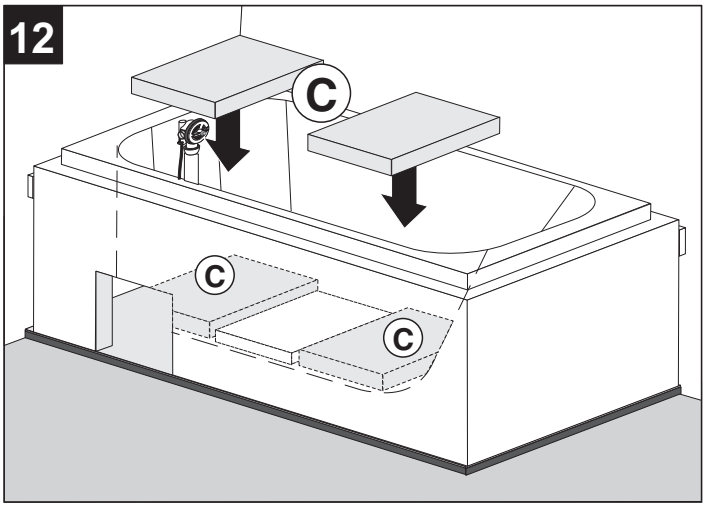
12
C
C
C

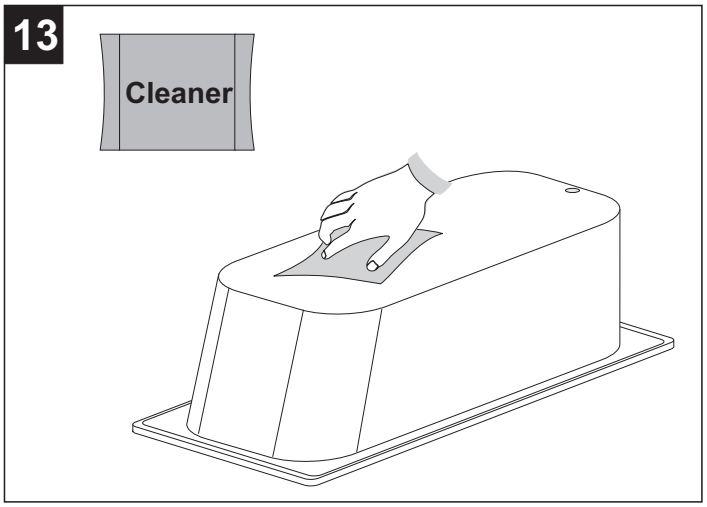
13
Cleaner

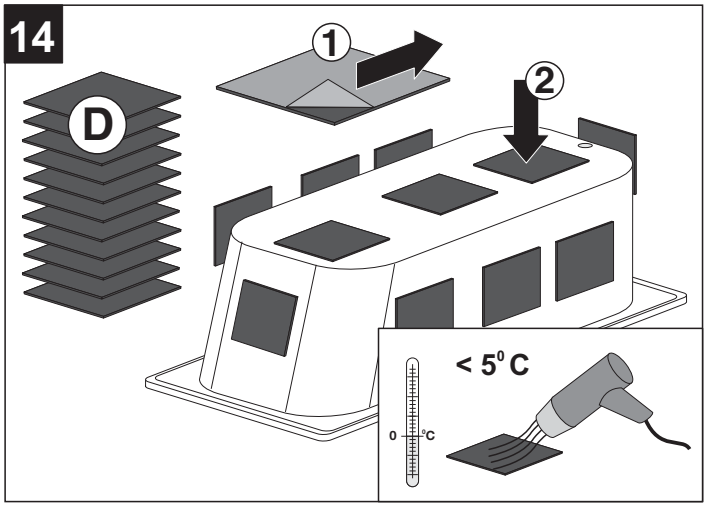
14
1
2
D
< 5⁰ C
0
°C

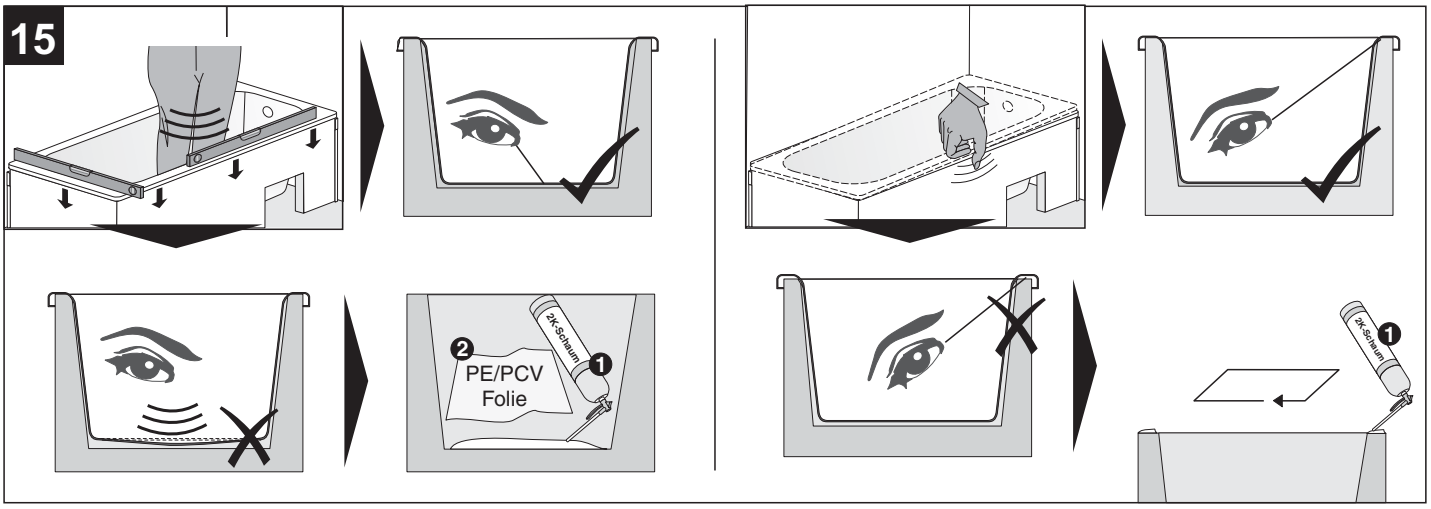
15
2K-Schaum
❷
PE/PCV
Folie
❶
2K-Schaum
❶

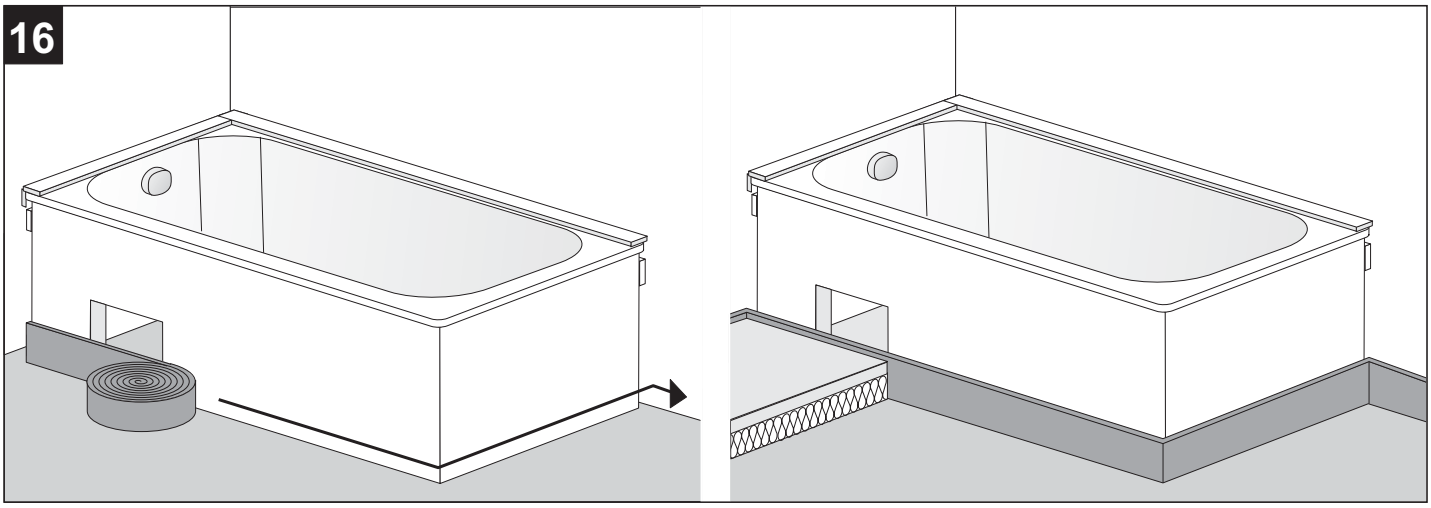
16

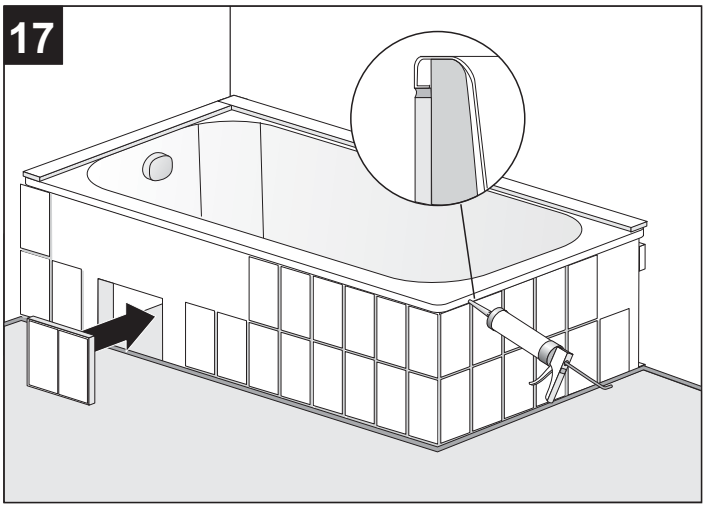
17

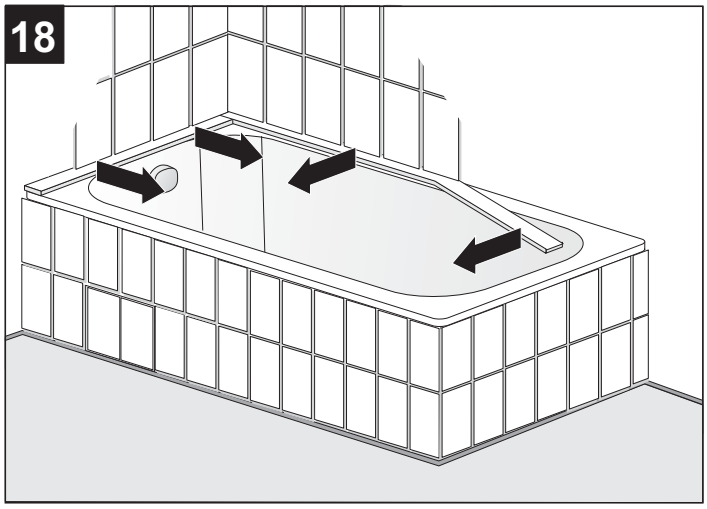
18

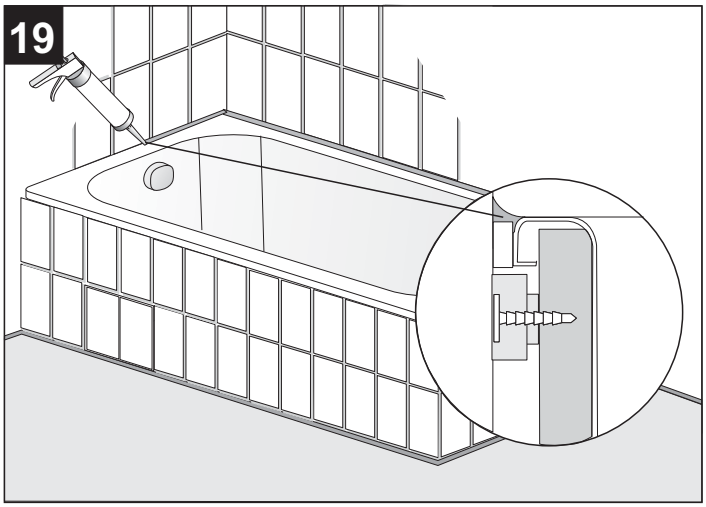
19